Lockset
Installation Instructions

ACCENTRA
ASSA ABLOY

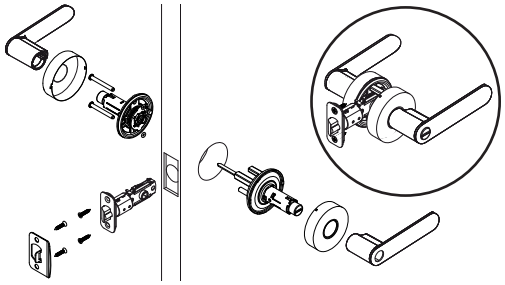

FAILURE TO FOLLOW THESE INSTRUCTIONS COULD RESULT IN DAMAGE TO THE PRODUCT AND VOID THE FACTORY WARRANTY

⚠ **WARNING**
This product can expose you to lead which is known to the state of California to cause cancer and birth defects or other reproductive harm. For more information go to www.P65warnings.ca.gov.

⚠ **WARNING**
Attention Installer: Any retrofit or other field modification to a fire rated opening can potentially impact the fire rating of the opening, and ASSA ABLOY makes no representations or warranties concerning what such impact may be in any specific situation. When retrofitting any portion of an existing fire-rated opening, or specifying and installing a new fire-rated opening, please consult with a code specialist or local code official (Authority Having Jurisdiction) to ensure compliance with all applicable codes and ratings.

1-855-557-5078 Ext. 2 • www.accentra-assaabloy.com
Copyright © 2018, 2023, 2024, ASSA ABLOY Access and Egress Hardware Group, Inc. All rights reserved. Reproduction in whole or in part without the express written permission of ASSA ABLOY Access and Egress Hardware Group, Inc. is prohibited.

263006881 05/24 Rev A

Experience a safer and more open world

Determining Handing

The hand of a door is determined from the secure side of the door. The term "secure" means the side from which you unlock and enter.

Left Hand "LH", Hinges Left. Open Inward

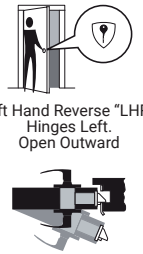

Left Hand Reverse "LHR", Hinges Left. Open Outward

Right Hand "RH", Hinges Right. Open Inward

Right Hand Reverse "RHR", Hinges Right. Open Outward

Before You Begin

template

x4
Strike/Latch

x2
Lockset Mounting

x2
Lockset Mounting

Dummy

x2

2. Prepare Frame & Install Strike Plate

x2

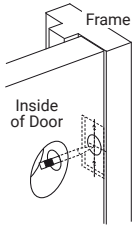

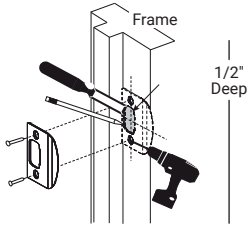

1. Prepare Door (if necessary)

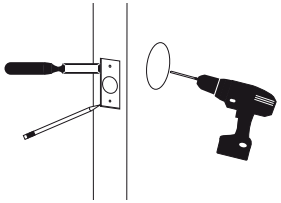

template

Drill holes 1/2 way thru door then complete from other side to prevent splitting.

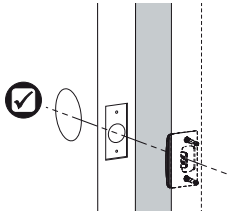

3. Install UL Steel Cup (If Your Product is UL Certified)

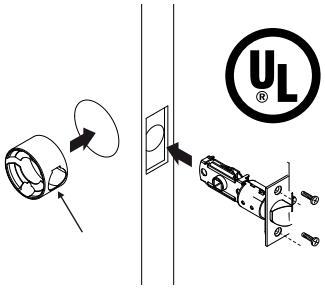

Lockset
1. Place the steel cup inside the 2/18" hole in the door as shown. The open part of the cup is now to qulify as an UL approved lockset the steel cup must be installed as part of the unit.

Instructions

facing the exterior.

NOTE: This lock is designed for installation in swinging type fire doors measuring up to 48 in wide and 96 in high rated up to and including 90 min.

2. Insert the latch through the 1" hole in the edge of the door guiding it through the 1" hole in the steel cup.

3. Proceed with normal installation of the lock or deadbolt.

4. Adjust Latch (if necessary) & Install

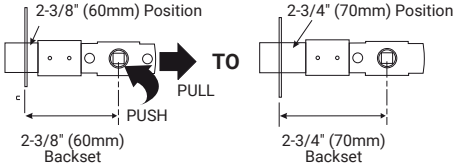

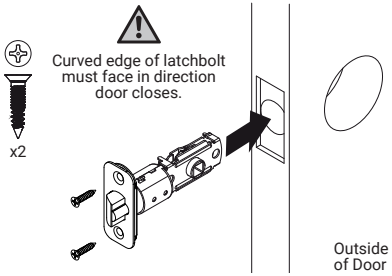

5. Install Exterior Chassis

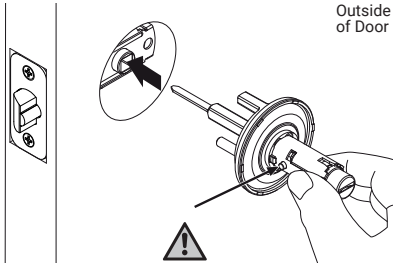

6. Install Interior Chassis

x2

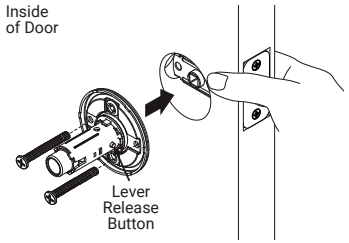

Hold Exterior Chassis stable while installing Interior Chassis

7. Install Interior Rose & Lever

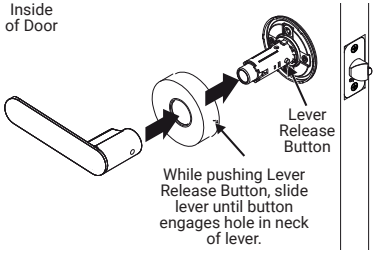

8. Oval and Traditional Rosette (Optional)

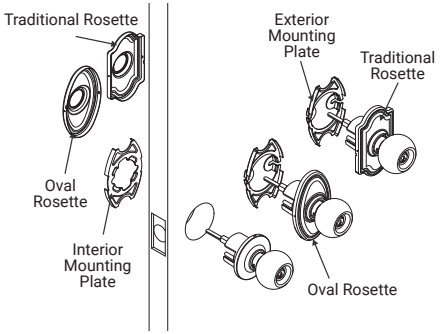

9. Install Exterior Oval and Traditional Rosette

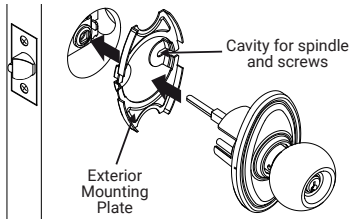

Align rose support in door in a vertical position. Insert square spindle through square hole in latch and install chassis over the latch.

10. Install Interior Oval and Traditional Rosette

Align chassis and rose support to door and insert attachment screws. Tighten screws to exterior chassis making sure the rose support is vertical and straight.

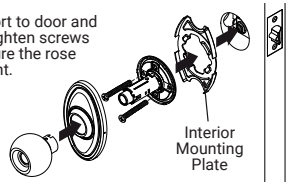

Repeat for Exterior Rose & Lever

Roses and levers "snap" onto chassis.

If rose needs to be removed, the best tool is a kitchen fork - tip of fork in removal notch on rose edge and push on fork prying off rose. Placing paper between door and fork will help prevent damage to door finish.

Levers are NOT HANDED. Exterior and interior levers may be exchanged. To remove lever, push lever release button and pull off lever.

Congratulations, you've installed the
ASSA ABLOY ACCENTRA
Heritage Collection Grade 2 Lockset!

How Remove Keyed Entry Cylinder

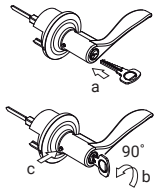

NOTE: To remove keyed entry lever handle, (a) insert key and (b) turn 90˚. Using a key or other fine point instrument, push in release button (c) and remove lever.

Dummy Function

ACCENTRA
ASSA ABLOY

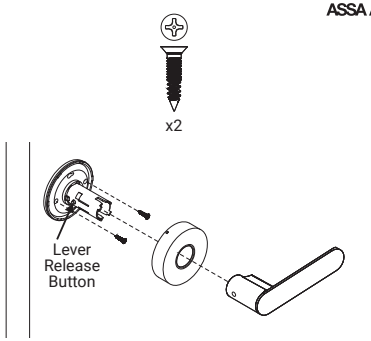

WARRANTY INFORMATION

This product is warranted against mechanical defects for 2 years, and finish defects for 1 year to the original purchaser.

If a defect does occur, please contact our Customer Service Department at 1-855-557-5078 Ext. 2, for detailed warranty redemption information. ASSA ABLOY ACCENTRA™ at its option, will either repair or replace the defective part and/or product. This warranty does not cover defects caused by improper Installation, misuse, or normal wear and tear. ACCENTRA IS NOT LIABLE FOR INCIDENTAL OR CONSEQUENTIAL DAMAGES. Some states do not allow exclusion of limitation of incidental or consequential damages, so the above exclusion may not apply to you. This warranty gives you specific legal rights, and you may also have other rights at vary from state to state.

1-855-557-5078 Ext. 2 • www.accentra-assaabloy.com

Copyright © 2018, 2023, 2024, ASSA ABLOY Access and Egress Hardware Group, Inc. All rights reserved. Reproduction in whole or in part without the express written permission of ASSA ABLOY Access and Egress Hardware Group, Inc. is prohibited.

263006881 05/24 Rev A

Experience a safer and more open world

INSTALLATION TEMPLATE

CAUTION: Although a door can be prepared by an untrained person, ACCENTRA recommends that measurements and drilling be done by a skilled carpenter or locksmith.

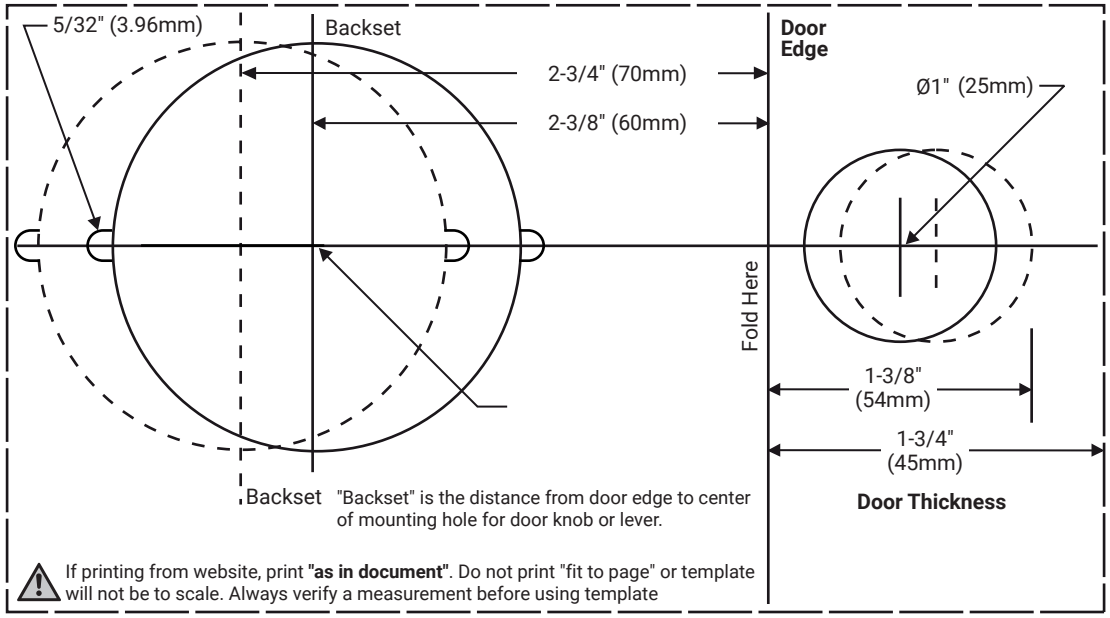

If printing from website, print **"as in document"**. Do not print "fit to page" or template will not be to scale. Always verify a measurement before using template